Reyco Granning SUSPENSIONS

Trailer Suspensions Owner's Manual

23AR/25AR/30AR

Installation Instructions
Maintenance Instructions
Service Parts

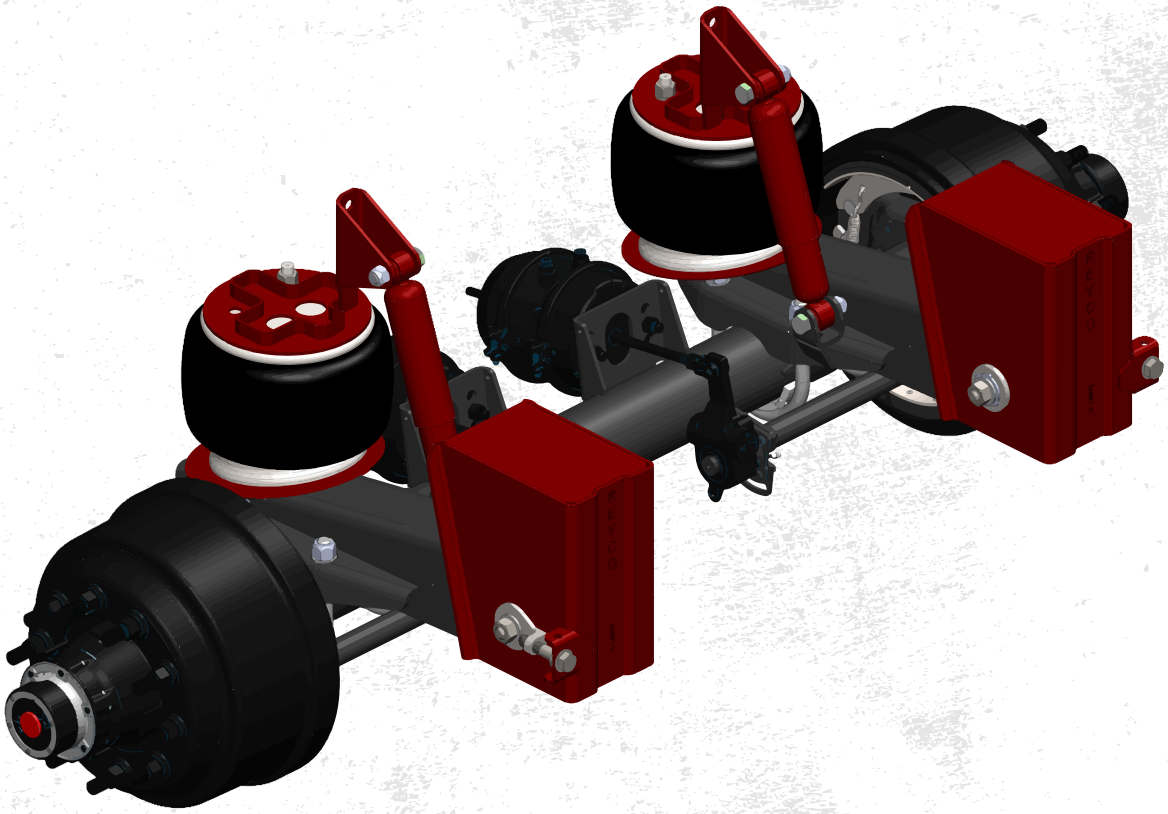

Reyco Granning Suspensions
1205 Industrial Park Drive
Mount Vernon, MO 65712
Phone: 417-466-2178
Fax: 417-466-3964
www.reycogranning.com

Document #: D712126
Revision: C
Revision Date: 10/18

COMPANY PROFILE

Reyco Granning Suspensions was formed by the merger and acquisition of two well-known names in the heavy-duty vehicle suspension industry: Reyco and Granning.

Reyco grew out of the Reynolds Mfg. Co. and was first known as a major supplier of brake drums for heavy-duty vehicles, and later developed a full line of air and steel spring suspensions for trucks, busses, trailers, and motorhomes.

Granning Air Suspensions was founded in 1949 in Detroit, Michigan as a manufacturer of auxiliary lift axle suspensions. Granning later became an innovator of independent front air suspensions for the motorhome industry.

Reyco Granning LLC was formed in early 2011 through a partnering of senior managers and MAT Capital, a private investment group headquartered in Long Grove, Illinois.

Reyco Granning manufacturing facilities are certified to the ISO9001:2008 standards, a globally recognized assurance that quality standards have been established and are maintained by regular rigorous audits.

SAFETY PROCEDURES & INFORMATION i.1
- SAFETY FIRST i.1
- OPERATOR SAFETY i.1
  - Lifting i.1
  - Parts Handling i.1
  - Welding i.1

- SUSPENSION SAFETY i.2
  - Overloading The Suspension i.2
  - Torque i.2
  - Air Supply i.2
  - Air Springs i.2

HANGER INSTALLATION i.3

AIR SPRING INSTALLATION i.4

BEAM / AXLE ASSEMBLY i.6

BEAM / AXLE WELDING SEQUENCE i.7

U-BOLT INSTALLATION i.8

HEIGHT CONTROL VALVE i.9

ALIGNMENT i.10

REY-ALIGN® DETAILS i.11

SERIAL TAGS i.12

ATTENTION

Assembly drawings are subject to change without warning. It is the responsibility of the installer to ensure tha current revision drawings are used for installation and design purposes.

SAFETY FIRST

Be sure to read and follow all installation and maintenance procedures.

LIFTING

Practice safe lifting procedures. Consider size, shape and weight of assemblies. Obtain help or the assistance of a crane when lifting heavy assemblies. Make sure the path of travel is clear.

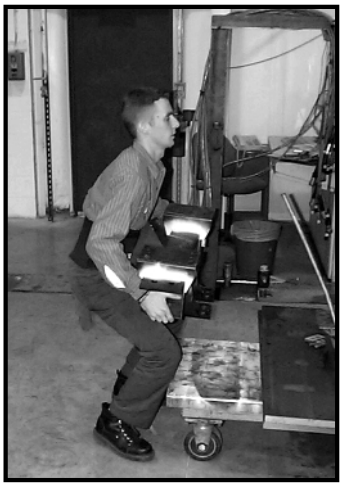

PARTS HANDLING

When handling parts, wear appropriate gloves, eyeglasses and other safety equipment to prevent serious injury.

WELDING

When welding, be sure to wear all personal protective equipment for face and eyes, and have adequate ventilation. When welding, protect spring beams and air springs from weld spatter and grinder sparks. Do not attach “ground” connection to springs.

Under normal use, steel presents few health hazards. Prolonged or repeated breathing of iron oxide fumes produced during welding may cause siderosis.

WELDING SPECS

To perform the welding, the welder must be qualified for 2G position per ANSI/ AWSD1.1-94 Section 5 Part C “Welder Qualification”.

It is recommended that all welds must be performed in a flat, horizontal position as closely as possible. Suspension components and their mating parts must be free of dirt, scale, paint, grease and moisture.

Any deviation from these welding specs must be reviewed and approved by Reyco Granning Engineering in writing prior to commencement of any work.

NOTE: Normally prior to any installations at an OEM, engineering contacts between companies have been made, and all necessary information to make an installation has been exchanged. However the following general steps are listed in the interest of all involved and should be included in an OEM plan to install the suspension.

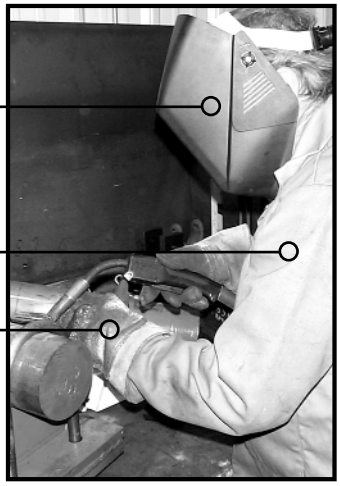

Standard Electrode
AWSE-7018 (oven dried)
.125" DIA. 120-140 amps D.C. electrode positive
.156" DIA. 120-160 amps D.C. electrode positive

Standard Wire
AWSER-70S-6 045" DIA.

Optional Wire
AWSER-70S-3 045" DIA.

Volts
26-30 DCRP

Current
275-325 amps

Gas
92% AR 8% CO_2 @ 30 to 35 CFH (OR)
90% AR 10% CO_2 @ 30 to 35 CFH

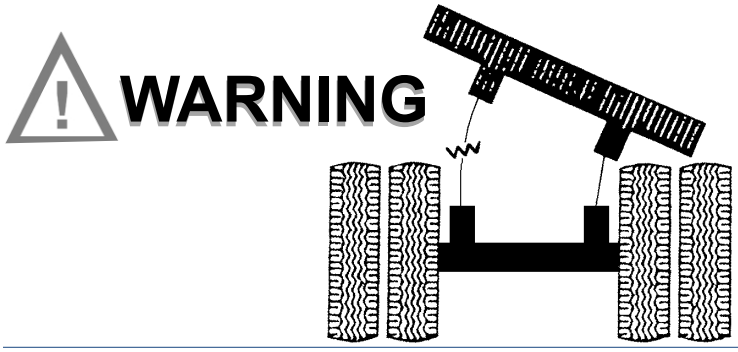

OVERLOADING

Overloading is the practice of transporting cargos that surpass the specified vehicle's ratings. Overloading can cause component failure, resulting in accidents and injuries.

This symbol indicates to the reader to use caution when seen and to follow specific requirements or warnings stated.

CAUTION: Specific torque requirements are needed.

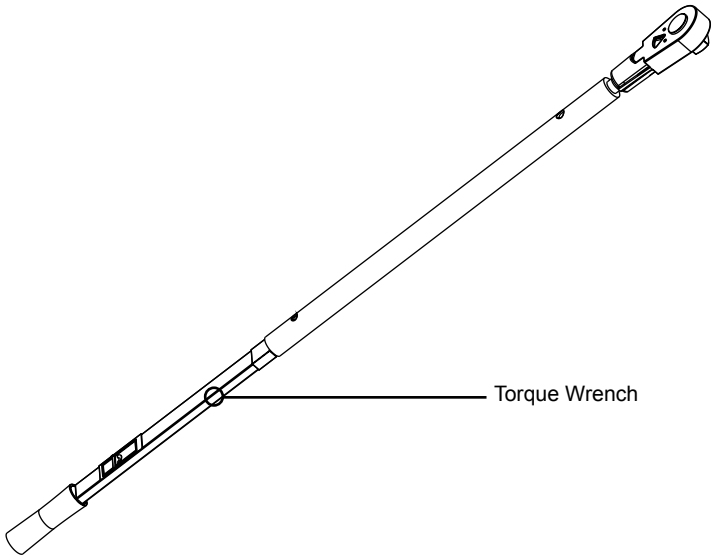

TORQUE

Proper tightening of the U-bolt nuts and alignment bolts are high priority items. A fastener system is considered "loose" any time the torque is found below required values. Failure to maintain the specified torque and to replace worn parts can cause component failure resulting in accident with consequent injury.

NOTE: It is extremely important after the first 1,000 to 3,000 loaded miles (1,600 - 4,800 kms) of operation, and with each annual inspection thereafter, that all of the bolt and nut tightening recommendations be followed. Any loose fasteners must be retorqued to comply with warranty requirements and to ensure long, trouble-free performance.

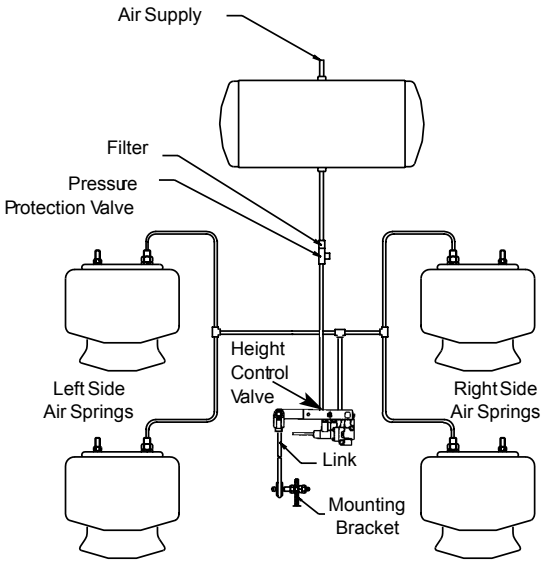

AIR SUPPLY

Check that supply air pressures and flow are adequate to supply system. Check height control valve and linkages to ensure unit is operating at correct ride height.

Normal Operation Air Spring

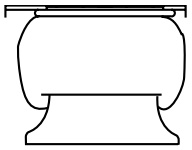

Under-Inflated Air Spring

AIR SPRINGS

The air springs are equipped with internal bump stops for safety. However, do not operate the loaded unit on the bump stops for any extended periods of time, except to move the unit to a repair facility.

Please ensure that you are matching the correct air spring to the suspension model.

HANGERS

1. Mark frame rails at centre-line locations of hanger brackets. Crossmembers are required at all hanger and air spring locations. Crossmembers are customer supplied.

TYPICAL DIMENSIONS FOR 23AR TU
SEE INSTALLATION DRAWING FOR EXACT DETAILS

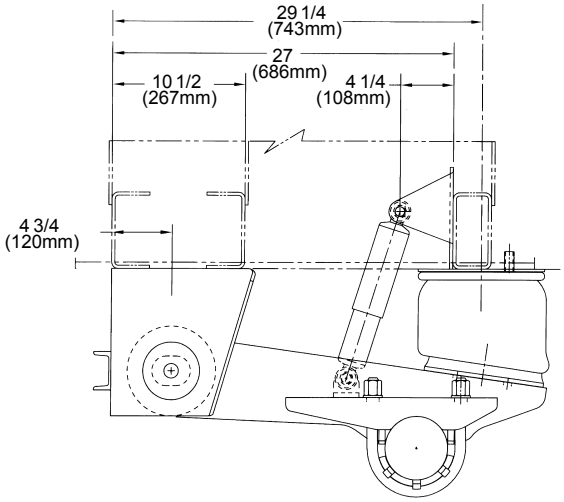

2. Locate hangers in proper vertical position on frame rails as shown on installation drawing. Ensure that they are square to the frame and to each other.

3. Weld hangers to the frame, following factory weld specs. These are typical installation procedures and may need to be modified due to varying frame designs. Ensure that all welding stopping points are followed as outlined.

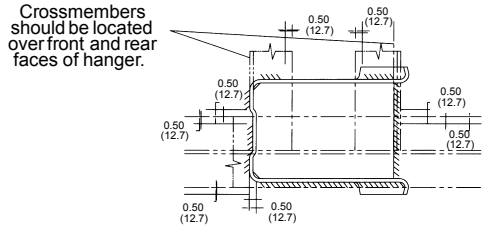

4. Ensure that the hangers are braced using one of the following methods:

- C-Channel crossmember as shown on installation drawing
- Gussets from the hanger to the main frame crossmember

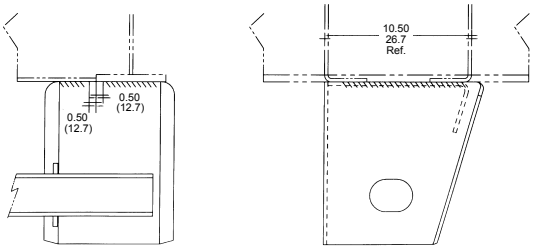

5. If the hanger has a severe offset to the frame 3/4” (19 mm) or more, gussets will be required.

Gussets are customer supplied.

The diagram offers a typical gusset design. Trailer manufacturer may opt for a different gusset type.

KEY POINT: Outer edge must be supported.

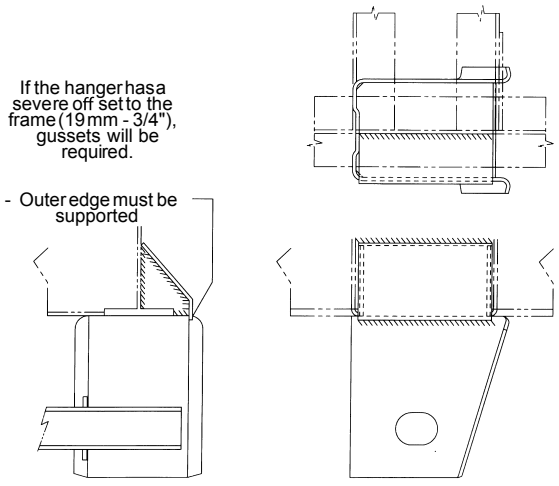

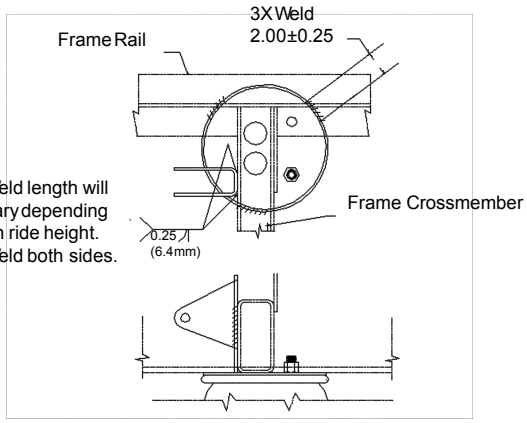

AIR SPRING MOUNTING PLATE (using tube crossmember)

NOTE: Typical examples shown on left and will vary from trailer to trailer.

1.Typical installation of air spring mounting plate requiring no spacer.

Additional support and gusseting may be required.
Gussets are customer supplied.
Approximately 60% of the air spring mounting plate must be properly supported.

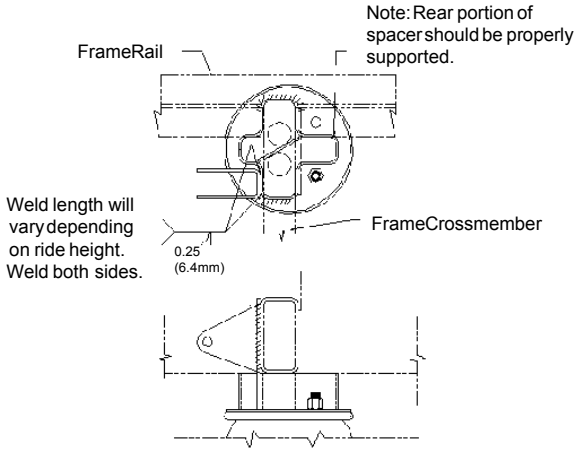

2. Typical installation of air spring mounting plate requiring a spacer.

Additional support and gusseting may be required.

Gussets are customer supplied.

Approximately 60% of the air spring mounting plate must be properly supported.

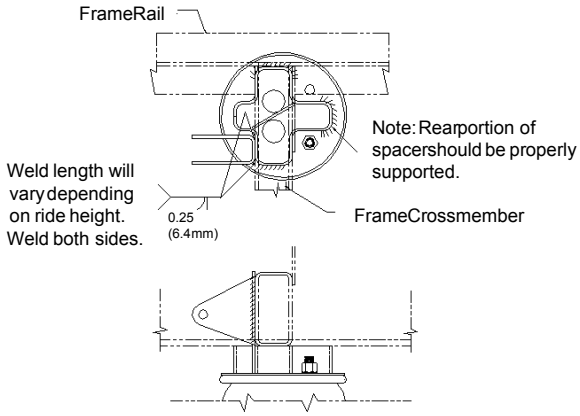

3. Typical severe offset installation of air spring mounting plate with or without a spacer.

Additional support and gusseting may be required.

Gussets are customer supplied.

Approximately 60% of the air spring mounting plate must be properly supported.

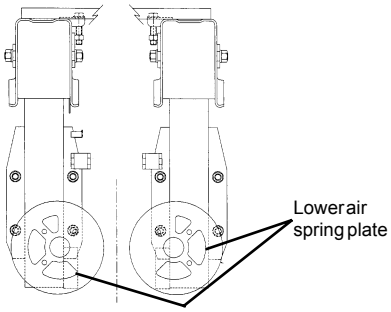

LOWER AIR SPRING PLATE (23AR ONLY)

1. Install plate (part #25492-01) by fitting between the piston and the trailing beam.

Secure the air spring to the trailing beam with fasteners supplied.

AIR SPRING MOUNTING PLATE (using channel crossmember)

NOTE: Typical examples shown on right and will vary from trailer to trailer.

1. Typical installation of air spring mounting plate requiring no spacer.

Additional support and gusseting may be required.

Gussets are customer supplied.

Approximately 60% of the air spring mounting plate must be properly supported.

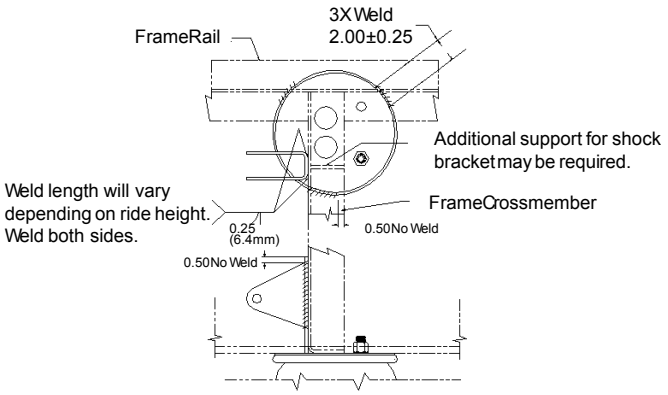

2. Typical installation of air spring mounting plate requiring a spacer.

Additional support and gusseting may be required.

Gussets are customer supplied.

Approximately 60% of the air spring mounting plate must be properly supported.

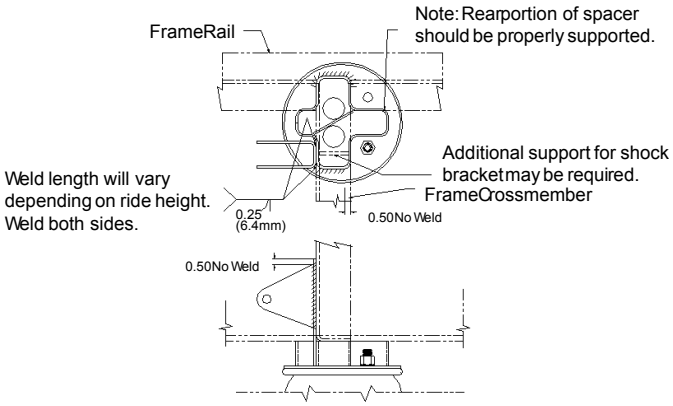

3. Typical severe offset installation of air spring mounting plate with or without a spacer.

Additional support and gusseting may be required.

Gussets are customer supplied.

Approximately 60% of the air spring mounting plate must be properly supported.

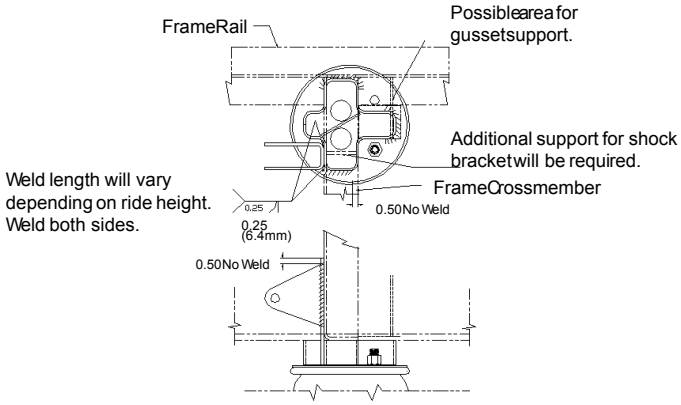

LOWER AIR SPRING PLATE (23AR ONLY)

1. Install plate (part #25492-01) by fitting between the piston and the trailing beam.

Secure the air spring to the trailing beam with fasteners supplied.

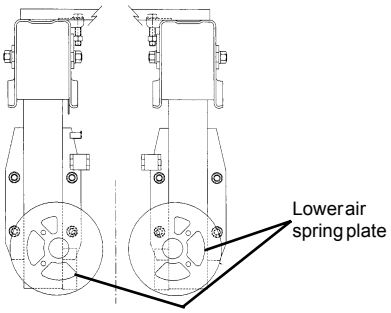

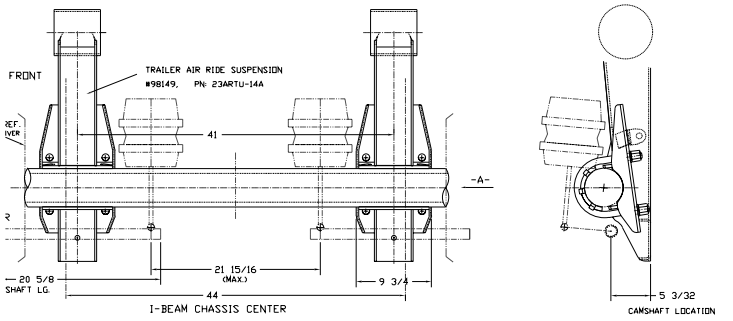

TOPMOUNT

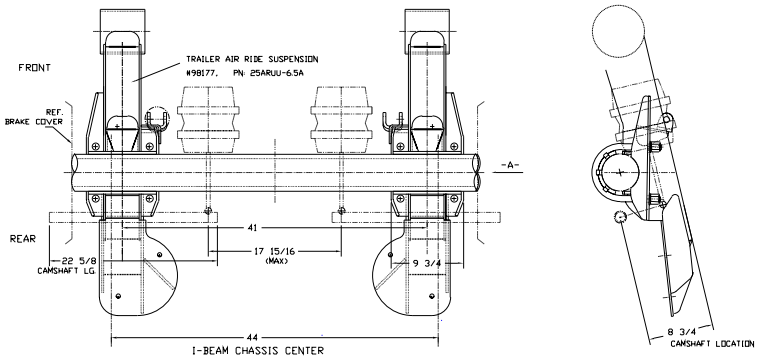

UNDERSLUNG

4.

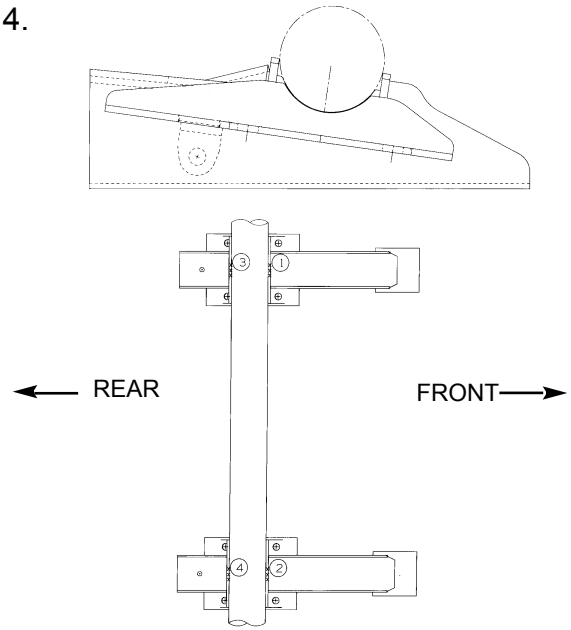

BEAM & AXLE ASSEMBLY

1. Cam shaft length may be a minimum of 20 5/8” (524 mm).

NOTE: Ancillary components should clear suspension components by a minimum of 2” (50 mm) to allow lateral movement.

Please call factory to verify your application.

2. **Brake camshaft** must be located according to axle manufacturer specifications. Be sure that proper brake chamber and brake assembly clearances are maintained. Please refer to installation drawing for correct positioning. Contact axle manufacturer for proper axle weight rating.

3. Review axle manufacturer’s specifications as preheating the axle connection components may be required.

4 . Ensure that the axle makes contact with the bottom of the axle seat as shown. Be sure axle surface is clean of debris at connection points.

5. Tack four weld axle in position using 1” (25 mm) long, 1/4” (6 mm) welds. Start at the front, then go to the rear, following the sequence shown.

NOTE: When welding axle, it is important to avoid all cold laps and undercuts. Fill all gaps and craters. Clean the weld between each individual pass.

AXLE RESTRAINT SYSTEM

Ensure that any system installed to limit axle travel permits the suspension to operate within its designed rebound, jounce, shock travel and operating range as expected from factory designed settings.

BEAM / AXLE WELDING SEQUENCE

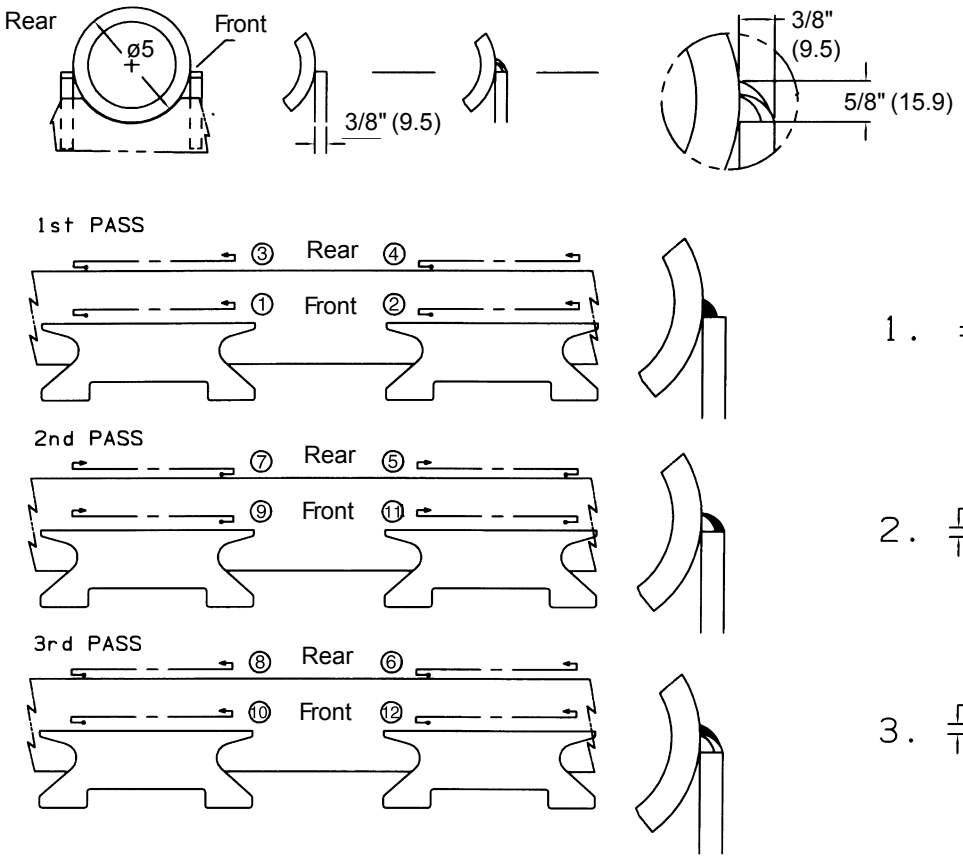

DIRECTION

End

Start

-Single Root Pass Welds...1-2-3-4
-Second/Third Pass...5/6-7/8-9/10-11/12

IMPORTANT

Leave 6.4 mm (1/4") unwelded at each end of axle connector

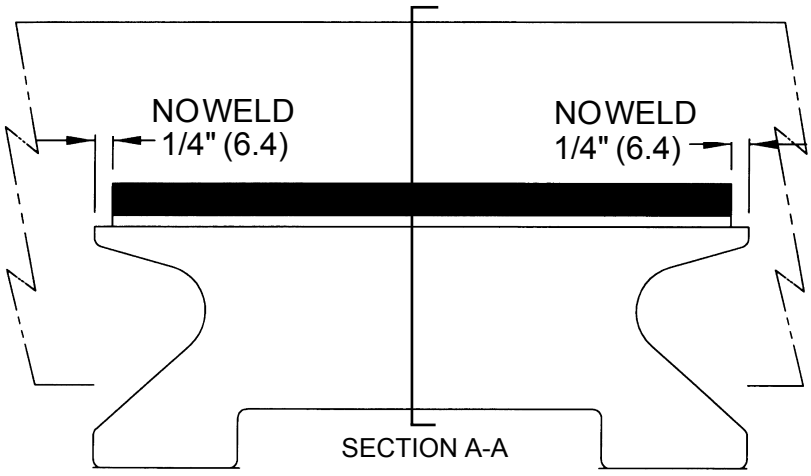

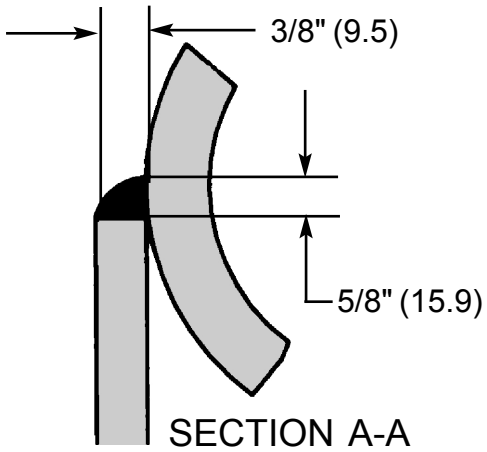

NOTE: Figures in brackets are shown in millimeters.

Torquing Sequence

FIRST .....150 ft lbs (205 Nm).....1*2*3*4 (shown below)
SECOND.....300 ft lbs (410 Nm) 4*3*2*1
THIRD .....480 ft lbs(650 Nm) 4*3*2*1

It is important to follow this 3 step sequence for every installation.

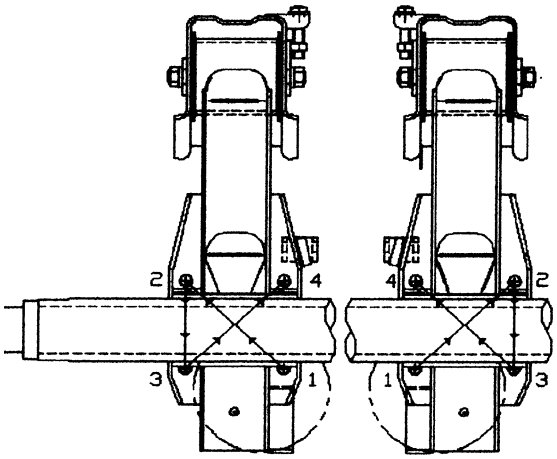

U-BOLTS

1. U-BOLT installation and torquing should be done only after completion of axle weld. Be sure to provide sufficient cooling time before applying torque wrench.

2. Do not apply any lubricants to the u-bolts.

3. Be sure that the u-bolt spacer is located centrally under the u-bolt.

4. Snug u-bolts evenly before applying torque.

5. Torque u-bolts by following 3 step sequence shown. Deviation from this sequence could result in an improperly installed clamp assembly which could cause damage to the axle connection.

FIRST .....150 ft lbs (205 Nm).....1*2*3*4
SECOND.....300 ft lbs (410 Nm).....4*3*2*1
THIRD .....480 ft lbs (650 Nm).....4*3*2*1

HEIGHT CONTROL VALVE

1. One height control valve (HCV) is used, regardless of the number of axles. The air springs on each side of the trailer are connected by 3/8” (9.5 mm) minimum diameter tubing (customer supplied). Care must be taken to ensure the HCV is positioned as shown on the installation drawing for the model being installed.

2. Care must be taken when installing HCV to ensure correct ride height is attained.

3. To set/adjust ride height, simply assemble the linkage to the desired length to attain the required ride height.

For maximum strength, it is recommended that the linkage set screws 5/8" be placed in the end holes of both links.

4. This suspension uses a height control valve (HCV) which utilizes a short delay.

5. Ensure that the air springs and all valves are plumbed as shown.

6. The pressure protection valve (PPV) is installed between the HCV and the air reservoir.

7. Using customer supplied materials, connect the HCV to all air springs using 3/8” (9.5 mm) diameter tubing. As with any pressure system, check for leaks and eliminate leakage, if present.

8. It is recommended that 5 to 10 P.S.I. remains in air springs at all times by installing a one-way check valve into the system.

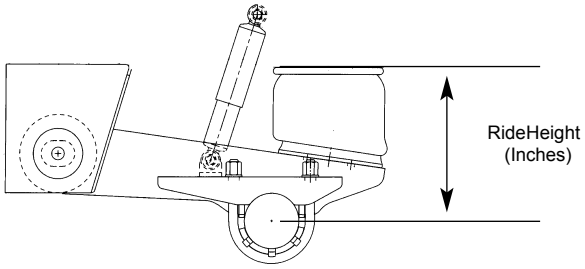

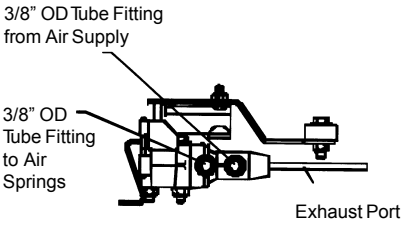

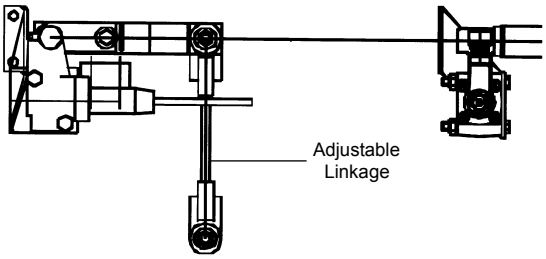

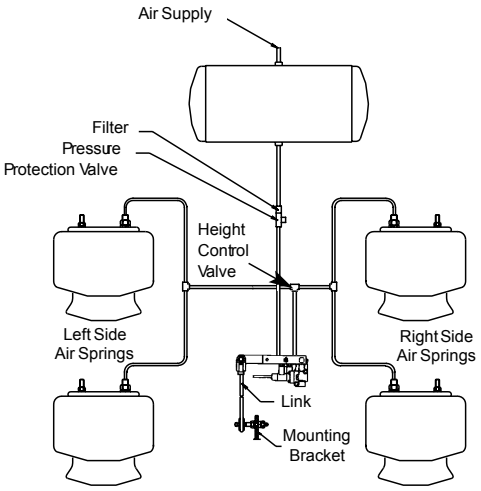

Alignment Procedure

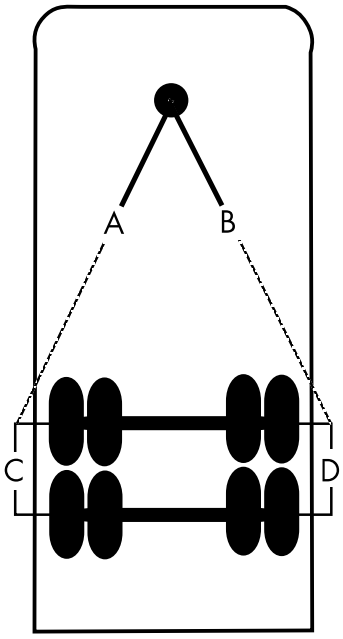

A=B +/- 1/8" (3.2)
C=D +/- 1/16" (1.6)

NOTE: Figures in brackets are shown in millimeters.

REY-ALIGN SYSTEM*

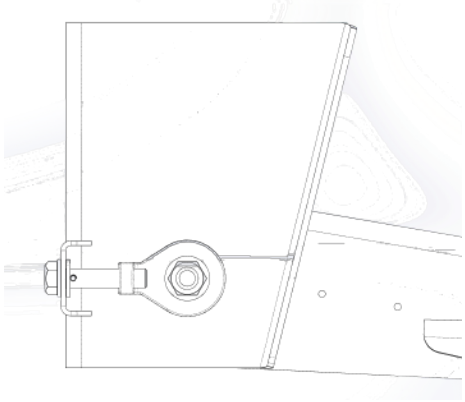

* Follow assembly instructions in Rey-Align® Details section (page i.11 & i.12).

ALIGNMENT

1. Release the brake system and pull the trailer forwards and backwards several times in a straight line to free the suspension from binding and tension.

NOTE: This procedure must be performed on a smooth level surface.

2. For best results, the use of axle extensions and a “BAZOOKA” type king post, or a suitable optical alignment device are recommended.

3. The hangers should have the Rey-Align assembly installed and approximately centered in the alignment slot.

4. During your alignment check, if alignment is necessary, you must first loosen the pivot bolts prior to proceeding with any adjustment.

a) Using your alignment procedures, align target axle to trailer king pin. Target axle can be adjusted using the adjustment bolt in the Rey-Align Tab moving the axle forward or aft as necessary.

b) Once the target axle has been aligned, tighten both pivot nuts until orange indicator dye is forced out of at least five orifices on the TensionRight washers. Alternatively, the nut may be tightened to 600 ft-lbs (810 Nm).

NOTE: 30AR Pivot bolts ($1^{1/8}$ diameter) are tightened to 900 ft-lbs (1220 Nm). If 30AR uses Huck bolts, weld the adjustment washers in place.

c) Align the second axle with the target axle using the Rey-Align Adjustment Bolt to adjust. Tighten pivot nuts as was done on the first axle.

d) Once the pivot bolts have been torqued, verify alignment. If any adjustment is required, pivot bolts must be loosened to adjust using the Rey-Align Adjustment Bolt. When complete, torque both Rey-Align Adjustment Bolts to 60 ft-lbs (81 Nm)

5. After initial 1,000 miles (1,600 km), the alignment should be re-checked and corrected if necessary.

Pivot connection does not arrive from the factory torqued!

Care must be taken to ensure that the Rey-Align® option is installed correctly

7/8" REY-ALIGN - CAST
(STANDARD 23ART, 25ART, 25ARU)

ITEM	DESCRIPTION	PART #	QTY
1	PIVOT SHAFT (7/8")	23948-01	1
2	TENSIONRIGHT WASHER (7/8")	713429-01	1
3	WASHER (7/8")	T7292	2
4	REY-ALIGN ADJUSTER, CAST	707865-01	1
5	SPRING PIN	24453-01	1
6	WASHER (3/4")	20852-01	2
7	REY ALIGN BOLT (3/4")	24398-01	1
8	REY-ALIGN WASHER, CAST	707924-01	1
9	COMPOSITE BEAM SPACER	23427-01	2
10	NUT (7/8")	24403-01	1

(per beam)

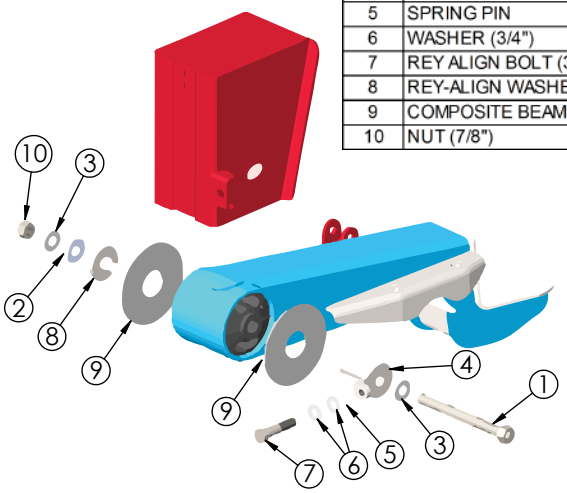

THE PIVOT CONNECTION IS NOT TORQUED AT THE FACTORY

Assemble the hardware as shown, ensuring correct installation of disc spring washers and ensuring that the flange washer is installed on the opposite side to the alignment assembly.

Care must be taken to ensure that the Rey-Align® option is installed correctly

1-1/8" REY-ALIGN

ITEM	DESCRIPTION	PART #	QTY
1	PIVOT BOLT (1-1/8")	702952-01	1
2	HARDENED WASHER	T5770	1
3	REY-ALIGN ASSY	23673-01	1
4	SPRING PIN	24453-01	1
5	WASHER (3/4")	20852-01	2
6	REY ALIGN BOLT (3/4")	24398-01	1
7	SLEEVE COVER	23432-01	1
8	COMPOSITE BEAM SPACER	23427-01	2
9	FLANGE WASHER	23656-01	1
10	DISC SPRING WASHER (1-1/8")	702953-01	1
11	LOCK NUT (1-1/8")	701308-02	1

(per beam)

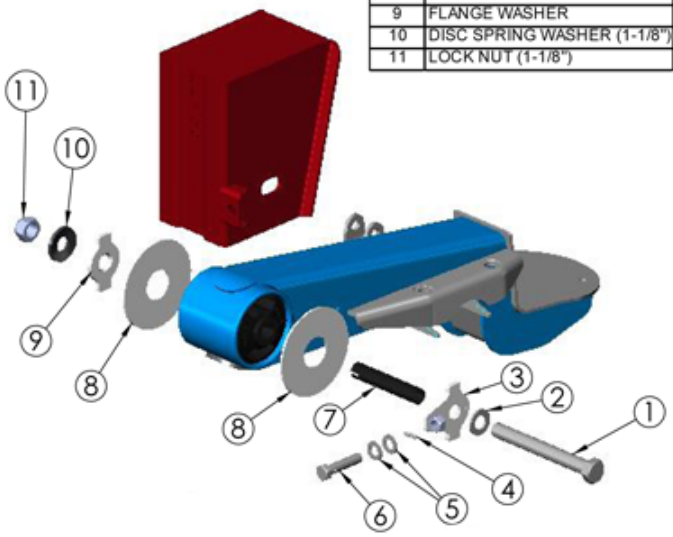

THE PIVOT CONNECTION IS NOT TORQUED AT THE FACTORY

Assemble the hardware as shown, ensuring correct installation of disc spring washers and ensuring that the flange washer is installed on the opposite side to the alignment assembly.

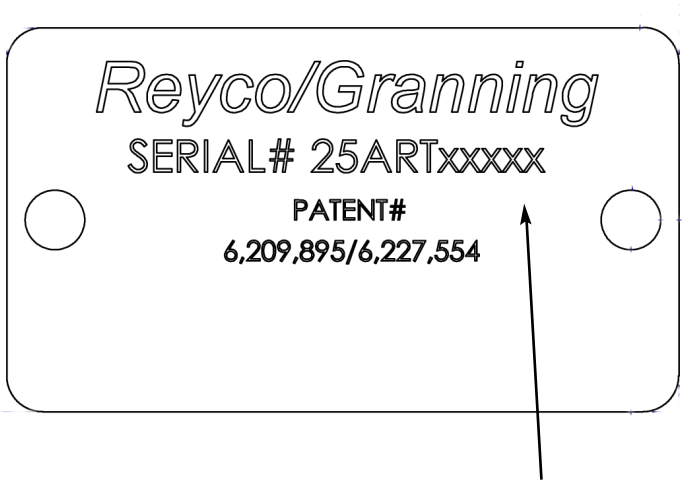

SERIAL TAGS

When installing a 23/25/30AR series air ride suspension, please take the time to identify the suspension for the end user by punching holes in the applicable boxes on the serial tag provided.

Location of the serial tag is on the trailing beam. One serial tag will be supplied with every suspension. This will be in addition to one torque requirement sticker and one PSI sticker.

Model Numbers: 23ARTxxxxx
25ARTxxxxx
25ARUxxxxx
30ARTxxxxx
30ARUxxxxx

For Your Own Notes

TORQUE REQUIREMENTS *m.1*

SHOCK & AIR SPRING REPLACEMENT *m.2*

PIVOT CONNECTION-INSPECTION *m.3*

TROUBLE SHOOTING GUIDE *m.4*

- *Dump Valve Problems* *m.4*
- *Axle Not Equalizing* *m.4*
- *Trailer Leans to one Side* *m.4*
- *Bushing Walk* *m.4*
- *Breaking/Cracking Hangers* *m.4*
- *Air* *m.4*
- *Trailer not Pulling Straight* *m.4*
- *Irregular Tire Wear* *m.4*
- *Fasteners* *m.4*
- *Rough Ride* *m.4*
- *Loose Pivot Connection* *m.4*
- *Shocks* *m.4*

BILL OF MATERIALS *m.5*

SERVICE KITS *m.6*

MAINTENANCE RECORD *m.10*

MODEL 23AR/25AR/30AR SUSPENSIONS, BY DESIGN, REQUIRE A MINIMUM OF MAINTENANCE. ALL SUSPENSION SYSTEMS REQUIRE PERIODIC CHECKS TO ASSURE CONTINUED, TROUBLE-FREE PERFORMANCE.

Tuthill Transport Technologies recommended maintenance schedules:

1. Pre-service inspection.
2. First service inspection, after 1,000-3,000 miles (1600-4,800 km).
3. PM inspections, concurrently with required annual inspection.
4. During replacement of any service parts.
5. Upon discovery of any loose components.

TORQUE REQUIREMENTS (Verify with each scheduled inspection.)

1. Tighten 7/8" u-bolt nuts—475-525 ft lb (645-715 Nm).
2. Tighten 3/4" shock absorber end nut—150-175 ft lb (205-240 Nm).
3. Tighten 1/2" upper and lower air spring mount nuts —25-30 ft lb (28-40 Nm).
4. Tighten 3/4" upper air spring mounting nuts—40-45 ft lb (55-60 Nm).
5. Tighten 1/4" air valve and linkage nut—5 ft lb (7 Nm).
6. Tighten 1-1/8" Huck® replacement pivot bolt nut—760-820 ft lb (1030-1110 Nm).
7. Tighten 7/8" Rey-Align® pivot shaft nut - 600 ft-lb (810 Nm), or until the orange dye is forced out of the TenshionRight washer.
8. Tighten 1-1/8" Rey-Align® pivot bolt nut—900 ft lb (1220 Nm).
9. Tighten 7/8" inverted axle clamp bolts—525 ft lb (715 Nm).

VISUAL INSPECTION

1. Loose or missing fasteners, especially u-bolt nuts and shock nuts.
2. Damaged hangers or axle connection brackets and welds.
3. Axle and trailing beam alignment.

All torque values are with clean and dry fasteners; and should only be verified with a quality calibrated wrench of known accuracy. Failure to follow these recommendations could void the warranty. Failure to maintain the specified torque values and/or to replace worn parts, can cause component and/or system failure resulting in an accident with consequent injury.

Nm = Newton Meters; ft lb = Foot Pounds

Bolts and hardware are US Standard. For identification purposes only, the following is conversion of common hardware and dimensions to metric.

inch	mm	inch	mm	inch	mm	inch	mm
7/32 (.22)	5.56	1/4 (.25)	6.35	3/8 (.375)	9.53	1/2 (.5)	12.7
5/8 (.625)	15.88	3/4 (.75)	19.05	7/8 (.875)	22.23	1 (1.0)	25.4

REAR SHOCK REFERENCE

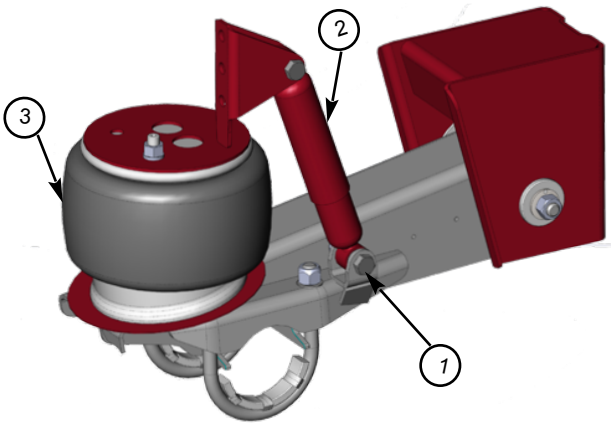

ITEM	MODEL	PART #	DESCRIPTION
1	ALL	TK23535	SHOCK BOLT KIT
2	23ART	23523-01	SHOCK ABSORBER
	25ART	24392-01	SHOCK ABSORBER
	30ART	23524-01	SHOCK ABSORBER
3	23ART	23433-01	AIR SPRING (STANDARD)
		707105-01	AIR SPRING (HEAVY DUTY)
	25ART	2539601	AIR SPRING (23,000 LBS)
		704671-02	AIR SPRING (25,000 LBS)
	30ART	23631-01	AIR SPRING

FORWARD SHOCK REFERENCE

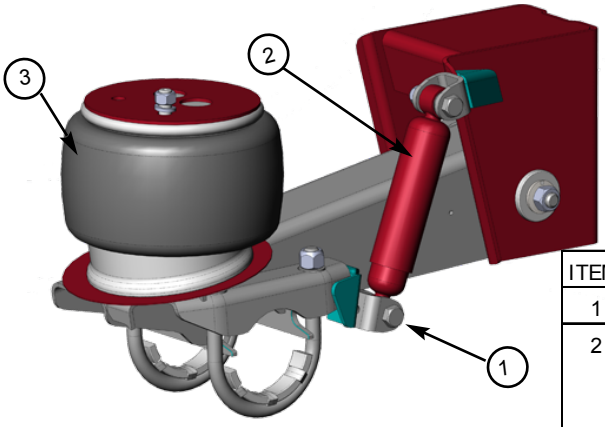

ITEM	MODEL	DESCRIPTION	PART #
1	ALL	SHOCK BOLT KIT	TK23535
2	23ART	SHOCK ABSORBER	702135-01
	25ART-14, -15, -16, -17	SHOCK ABSORBER	702135-01
	25ART-18, -19, -20	SHOCK ABSORBER	704672-01
	25ARU	SHOCK ABSORBER	23553-01
	30ART	SHOCK ABSORBER	23524-01
	30ARUU-9, -12, -13, -17 30ARUUL-12, -13, -17	SHOCK ABSORBER	23524-01
	25ARU 30ARUUU-14, -15 30ARUUL-9, -14, -15	SHOCK ABSORBER	23553-01
3	23ART	23433-01	AIR SPRING (STANDARD)
		707105-01	AIR SPRING (HEAVY DUTY)
	25ART	2539601	AIR SPRING (23,000 LBS)
		704671-02	AIR SPRING (25,000 LBS)
	25ARU	2539601	AIR SPRING (23,000 LBS)
		704671-02	AIR SPRING (25,000 LBS)
	30ART	23631-01	AIR SPRING
	30ARU	23631-01	AIR SPRING

Special Torque Instructions

After July 1, 2001 Upper Fasteners: 150 - 175 ft lb (205 - 240 Nm)
Lower Fasteners: 205 - 240 Nm (150 - 175 ft lb)

Before July 1, 2001 Upper Fasteners: 205 - 240 Nm (150 - 175 ft lb)
Lower Fasteners: 275 - 305 Nm (200 - 225 ft lb)

INSPECTION FREQUENCY (recommended)

Normal Service ..... Standard Annual Maintenance
Severe Service ..... Semi-Annually
Off Road Service ..... Monthly

INSPECTION PROCEDURE	ACTION
Inspect the pivot connection , look for evidence of loose fasteners and movement in connection, damage and signs of deterioration.	Replace hardware as required. Ensure torque reading is 600 ft. lbs. (if 7/8" pivot shaft) or 900 ft. lbs. (if 1-1/8" pivot bolt).
Inspect the white beam spacers for excessive wear AND inspect bushing to determine if it is centered in the trailing beam or if it is off-centered.	If bushing is centered - replace both beam spacers (worn) and realign the axle, new hardware recommended. If bushing is off -center - install new bushing, replace both beam spacers (worn) and realign the axle, new hardware recommended.
Inspect bushing housing (tube) on the trailing beam: If width is 6": see #2 If width is 5-7/8" to 6": see #3 If width is 5-3/4" to 5-7/8": see #4 If width is under 5-3/4": see #5	#1 - Inspect the bushing housings (steel tubes) to determine if wear has occured. Measure the length of the housing tubes, and perform one of the following actions (see box at left). #2 - Replace both beam spacers (worn) and realign the axle, new hardware recommended. #3 - Chamfer the end of the bushing housing tube, install new bushing*, replace both beam spacers (worn) and realign the axle. #4 - Chamfer the end of the bushing housing tube, install new bushing*, replace both beam spacers (worn) with THREE beam spacers and realign the axle. #5 - Replace the trailing beam (includes new bushing), replace both beam spacers (worn) and realign the axle, new hardware required. * hardware included in re-bush kit
Inspect bushing: - Broken away from steel sleeve - Severely torn, cracked or damaged (ie: from recess) - Deteriorated to a point where it is no longer capable of correct function.	Chamfer the end of the bushing housing tube, install new bushing*, replace both beam spacers (worn) and realign the axle. * hardware included in re-bush kit

DUMP VALVE PROBLEMS

CAUTION: Due to the geometry of all trailing beam air ride suspensions, the trailer will move forward when the air is exhausted.

If the trailer brakes are locked, do not exhaust the suspension. The resulting movement may cause damage to or collapse the landing legs.

Always exhaust the suspension BEFORE locking the brakes.

AXLES NOT EQUALIZING

Mounting height may be incorrect due to sloping trailer or frame deflection.

The height control valve may be improperly adjusted. Correct as required.

Check for correct air springs and change if required.

Check for restrictions in airlines and correct as required.

TRAILER LEANS TO ONE SIDE

Check axle welds, could be missing or broken.

Trailing beams could be installed out of parallel.

Pivot bushing could be faulty or require replacement.

Alignment washer welds could be broken or missing.

BUSHING WALK

This is indicated by the trailing beams shifting off of the bushings.

Check alignment.

Trailing beams could be installed out of parallel.

Hangers are not centered to the trailing beams.

Application related and may be caused by none of the above.

Installing the optional "no walk bushing system" may prevent this. This option is currently under development

BREAKING / CRACKING HANGERS

See bushing walk.

Insufficient support and/or gusseting.

Missing channel supports and/or gussets.

Alignment washer welds could be broken or missing.

Application related and may be caused by none of the above.

AIR

1. Bags won't inflate (A) Check air supply at the height control valve. If supply is good, (B) check to see if air is going thru the valve when it is actuated. A majority of problems are found at this point. If air is going thru the valve, (C) check for blockage or a pinched airline to the air bags.

2. Be sure that height control valve is set properly.

TRAILER NOT PULLING STRAIGHT

Check alignment. Recheck alignment at annual inspections. Ensure suspension is square to the axles.

IRREGULAR TIRE WEAR

Check the alignment. Recheck alignment at annual inspections.

FASTENERS

Loose fasteners need immediate attention. Check components for wear and be sure holes are not worn or egg shaped. When replacing, be sure threads are clean, lubricated and not deformed. Consult the maintenance section for the correct torque specifications and replace any fastener which is damaged or will not stay torqued. If bolts need to be replaced, be sure to use the same grade of fastener.

Specific Torque requirements needed.

ROUGH RIDE

Check the suspension ride height. Be sure the suspension is operating at the proper height. If too high, over inflation of the bags will be evident. Ensure the opposite is not occurring (no air in air springs) and correct as required.

LOOSE PIVOT CONNECTION

A properly torqued pivot connection is the key to a long life of a suspension. It is crucial to ensure sufficient clamp load through the bushing to prevent premature failure. With Rey-Align® hangers, ensure all components are included and that proper installation/ torque procedures are followed.

SHOCKS

Shocks may fail due to over extension. Check the mounting bolts to be sure no damage to the mounts has occurred. Shock replacement must be done with shocks recommended by Tuthill Transport Technologies or shock manufacturer. Leaking (dripping) shocks need to be replaced. Shocks with a slight mist of oil on them need to be checked, not necessarily replaced. Ensure that the correct shock has been installed.

CRACKED CAP SUPPORT GUSSETS

If a chain stop or similar device has been added, ensure that the rebound/jounce and shock travel are identified, verified and operating within factory expectations.

PINCHED AIR BAGS

Add one-way check valve as suggested in installation manual (page i.9).
Ensure plates are installed under bags if 23AR (page i.4 and i.5).

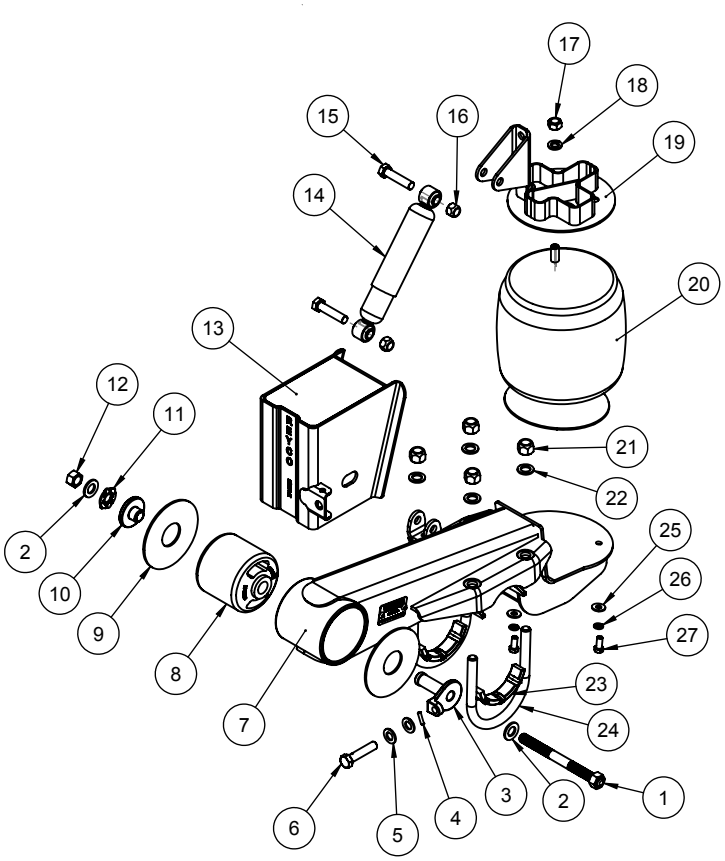

ITEM #	DESCRIPTION	#PER SUSP	REMARKS
1	PIVOT SHAFT	2	
2	HARDENED WASHER	4	
3	REY-ALIGN ASSEMBLY	1	
4	SPRING PIN	2	
5	WASHER (3/4)	4	
6	REY-ALIGN BOLT (3/4)	2	
7	TRAILING BEAM	2	BUSHING INCLUDED WHEN BEAM IS ORDERED
8	BUSHING	2	
9	COMPOSITE BEAM SPACER	4	
10	REY-ALIGN WASHER	2	
11	TENSIONRIGHT WASHER	2	
12	NUT	2	
13	HANGER	2	
14	SHOCK ABSORBER	2	
15	SHOCK BOLT	4	
16	SHOCK NUT	4	
17	NUT	2	DOUBLE QTY FOR 30ART
18	LOCK WASHER	2	DOUBLE QTY FOR 30ART
19	AIR SPRING TOP PLATE ASSEMBLY	2	
20	AIR SPRING	2	
21	U-BOLT NUT	8	
22	U-BOLT WASHER	8	
23	U-BOLT SPACER	4	
24	U-BOLT	4	
25	WASHER	4	
26	LOCK WASHER	4	
27	AIR SPRING BOLT	4	
28	LOCK WASHER	2	DOUBLE QTY FOR 30ART
29	NUT	2	DOUBLE QTY FOR 30ART
30	PIPE PLUG	2	30ART

Model	Part #	Item Description	Quantity
23AR/25AR/30AR	TK23961	U-bolt Kit	1
		U-BOLT, 7/8 X 8.38 X 6.13D	4
		L'NUT, HEX 7/8-14 UNF GR.C	8
		SPACER, U-BOLT 1/2"THK NOTCH	4
		WASHER, FLAT 7/8 X 1.469, .100	8

Model	Part #	Item Description	Quantity
23AR/25AR	K701163-1	Rebush Kit [Non-cast 1 side]	1
		PIVOT SHAFT SLEEVE 7.906"	1
		Pivot Shaft NUT, HEX 7/8-14 UNF GR. 8	1
		SLEEVE COVER 6 5/8"	1
		BUSHING, TRAILING BEAM	1
		SPACER, BEAM 7 X 2 3/8, 3/16	2
		PIVOT SHAFT	1
		WASHER FLAT 7/8 x 1.75	2
		7/8 TENSIONRIGHT WASHER	1

Model	Part #	Item Description	Quantity
23AR/25AR	K701163-2	Rebush Kit [Non-cast 2 sides]	1
		PIVOT SHAFT SLEEVE 7.906"	1
		Pivot Shaft NUT, HEX 7/8-14 UNF GR.	1
		8 SLEEVE COVER 6 5/8"	1
		BUSHING, TRAILING BEAM	1
		SPACER, BEAM 7 X 2 3/8, 3/16 PIVOT	2
		SHAFT	1
		WASHER FLAT 7/8 x 1.75	2
		7/8 TENSIONRIGHT WASHER	1

Model	Part #	Item Description	Quantity
23AR/25AR	K710708-03	Rebush Kit [Cast 1 side]	1
		Pivot Shaft NUT, HEX 7/8-14 UNF GR. 8	1
		BUSHING, TRAILING BEAM	1
		SPACER, BEAM 7 X 2 3/8, 3/16	2
		PIVOT SHAFT	1
		7/8 TENSIONRIGHT WASHER	1
		WASHER, FLAT 7/8 x 1.75, .157 JIT	2

Model	Part #	Item Description	Quantity
23AR/25AR	K710708-04	Rebush Kit [Cast 2 sides]	1
		Pivot Shaft NUT, HEX 7/8-14 UNF GR. 8	2
		BUSHING, TRAILING BEAM	2
		SPACER, BEAM 7 X 2 3/8, 3/16	4
		PIVOT SHAFT	2
		7/8 TENSIONRIGHT WASHER	2
		WASHER, FLAT 7/8 X 1.75, .157 JIT	4

Model	Part #	Item Description	Quantity
23AR/25AR	K710708-05	Rebush Kit + Cast Rey Align Conversion Kit [1 side]	1
		WASHER, FLAT 7/8 X 1.75, .157 JIT	1
		BOLT, HEX 3/4-10 UNC 3.5 W/HOLE	1
		WASHER, FLAT 3/4 X 1.48, .120	2
		COILED SPRING PIN	1
		Pivot Shaft NUT, HEX 7/8-14 UNF GR. 8	1
		PIVOT SHAFT	1
		WASHER, FLAT 7/8 x 1.75 SPACER,	2
		BEAM 7 X 2 3/8, 3/16	2
		REY ALIGN WASHER-CAST	1
		REY ALIGN ADJUSTER-CAST	1
		BUSHING, TRAILING BEAM	1
		7/8 TENSIONRIGHT WASHER	1

Model	Part #	Item Description	Quantity
23AR/25AR	K710708-06	Rebush Kit + Cast Rey Align Conversion Kit [2 sides]	1
		WASHER, FLAT 3/4 X 1.48, .120	4
		BOLT, HEX 3/4-10 UNC 3.5 W/HOLE	2
		COILED SPRING PIN	2
		Pivot Shaft NUT, HEX 7/8-14 UNF GR. 8	2
		WASHER, FLAT 7/8 X 1.75, .157 JIT	2
		PIVOT SHAFT	2
		REY ALIGN WASHER-CAST	2
		REY ALIGN ADJUSTER-CAST	2
		BUSHING, TRAILING BEAM	2
		SPACER, BEAM 7 X 2 3/8, 3/16	4
		WASHER, FLAT 7/8 x 1.75	4

Model	Part #	Item Description	Quantity
30AR	K704747	Rebush Kit	1
		POLYETHELENE BEAM SPACER	2
		STEEL BEAM SPACER	2
		BOLT, HEX 1-1/8 - 12UNF 10"	1
		DISC SPRING WASHER	1
		L'NUT, HEX 1 1/8-12 UNF GR.C	1
		SLEEVE COVER	1
		CLAMPING SPACER	2
		BUSHING	1
		Washer, Flat 1 X 2.00 .157	1

Model	Part #	Item Description	Quantity
23AR	K710708-05	Pivot Bolt Hardware Kit	1
		WASHER, FLAT 7/8 X 1.75, .157 JIT	1
		BOLT, HEX 3/4-10 UNC 3.5 W/HOLE	1
		WASHER, FLAT 3/4 X 1.48, .120	2
		COILED SPRING PIN	1
		Pivot Shaft NUT, HEX 7/8-14 UNF GR. 8	1
		PIVOT SHAFT	1
		WASHER, FLAT 7/8 x 1.75	2
		SPACER, BEAM 7 X 2 3/8, 3/16	2
		REY ALIGN WASHER-CAST	1
		REY ALIGN ADJUSTER-CAST	1
		7/8 TENSIONRIGHT WASHER	1

Model	Part #	Item Description	Quantity
23AR/25AR/30AR	TK23535	Shock Bolt Kit	1
		L'NUT, HEX 3/4-10 UNC GR.C	4
		BOLT, HEX 3/4-10 UNC 3.25	4

Model	Part #	Item Description	Quantity
23AR/25AR	TK23658	Air Spring Bolt Kit	1
		Washer, FLAT 1/2 X 1.25, .125	4
		WASHER, HELI SPRG 1/2 X .873 JIT	4
		WASHER, HELI SPRG 3/4 X 1.27	2
		NUT, HEX 3/4-16 UNF GR.B	2
		BOLT HEX 1/2-13 UNC1.125	4

Model	Part #	Item Description	Quantity
30AR	TK23532	Air Spring Bolt Kit [Top Mount]	1
		Washer, FLAT 1/2 X 1.25, .125	4
		WASHER, HELI SPRG 1/2 X .873 JIT	4
		WASHER, HELI SPRG 3/4 X 1.27	4
		NUT, HEX 3/4-16 UNF GR.B	4
		BOLT HEX 1/2-13 UNC1.125	4
		PIPE PLUG-1/4	2

Model	Part #	Item Description	Quantity
30AR	TK24778	Air Spring Bolt Kit [Underslung]	1
		WASHER, HELI SPRG 1/2 X .873 JIT	10
		WASHER, HELI SPRG 3/4 X 1.27	2
		NUT, HEX 3/4-16 UNF GR.B	2
		BOLT HEX 1/2-13 UNC1.125	8
		NUT, HEX 1/2-13 UNC GR.B	2

Model	Part #	Item Description	Quantity
23AR/25AR/30AR	TK25368	Air Spring Top Plate Screw Kit	1
		SCREW, FLT SCKT 1/2-13 X 2.00	4
		L'NUT, HEX 1/2-13 UNC GR.C JIT	4

Maintenance Record

Name of Owner	Address of Owner
Date of Purchase	Name and Address of Dealer
Model of Vehicle	Vehicle Identification Number
Suspension Model Number:	Suspension Serial Number:

Inspection and Maintenance Item	Date	Mileage	Service Performed

Reyco® Granning®

SUSPENSIONS

ISO 9001:2015 Certified

1-800-753-0050

www.reycogranning.com

Mount Vernon
1205 Industrial Park Drive
Mount Vernon,MO 65712
(800) 753-0050,Fax (417) 466-3964